SENSOR-SHOPBD.COM
SENSOR-SHOPBD.COM
SENSOR-SHOPBD.COM
SENSOR-SHOPBD.COM
SENSOR-SHOPBD.COM

SENSOR SHOP BD

Techsense Bangladesh Ltd

# Ultrasonic sensors with a digital output, Code- BUS003L

They measure fill levels, heights and sag without making contact. Because they are universally applicable, they work independently of color and surface texture. High resolution, high ranges and small blind spots guarantee the utmost precision. The ultrasonic sensors are distinguished by their voltage or power output and variants with an additional switching output.

## General Attributes

- Measuring Range : 350...5000 mm
- Connection : M12x1-Male
- Operating voltage Ub : 9...30 VDC
- Switching frequency : 4 Hz
- Switching output : PNP NO/NC
- Ambient temperature : -25…70 °C
- Storage temperature : -40…85 °C
- Housing material : Brass, PBT, TPU
- Ultrasonic Frequency : 120 kHz
- Rated operating distance Sn : 3400 mm
- IP rating per IEC 60529 : IP67
- Material sensing surface : PU foam,Epoxy resin,Glass.

## Application Notes

Object detection
Distance measurement
Indicate the position of objects and materials.
Determine the dimensions of objects such as height, width and diameter.
level control for caustic liquids
loop control
Roll diameter, tension contro
Distance measurement

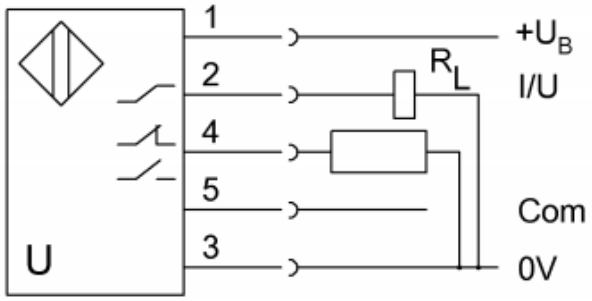


Wiring diagram

For further information please visit : https://goo.gl/XJj7mp

CE c UL us LISTED IND. CONT. EQ. 81U2 for use in the secondary of a class 2 source of supply

c UL us LISTED IND. CONT. EQ 81U2 for use in the secondary of a class 2 source of supply Environmental - Type 1 Enclosure

EAC

We are the authorized distributor of Balluff in Bangladesh.