SENSOR-SHOPBD.COM
SENSOR-SHOPBD.COM
SENSOR-SHOPBD.COM
SENSOR-SHOPBD.COM
SENSOR-SHOPBD.COM

Techsense Bangladesh Ltd

Nut Code- 2210006

- Body: OT58 brass
- Maximum pressure 870 psi, 6000 kPa 60 bar
- For use with copper tubes

GENERAL ATTRIBUTES

■ Ref.	: B10
■ Ø	: 15/12
■ CH1	: 27
■ L	: 17
■ F	: M22x1.5

COMPONENTS

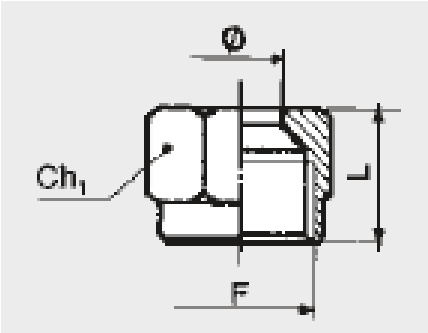

Wiring Diagram

TECHNICAL DATA

For further information please visit : https://goo.gl/TPYAnf

LISTED IND. CONT. EQ. 81U2 for use in the secondary of a class 2 source of supply

IND. CONT. EQ 81U2 for use in the secondary of a class 2 source of supply Environmental - Type 1 Enclosure

We are the authorized distributor of Metal Work in Bangladesh.