SENSOR-SHOPBD.COM
SENSOR-SHOPBD.COM
SENSOR-SHOPBD.COM
SENSOR-SHOPBD.COM
SENSOR-SHOPBD.COM

SENSOR shopbd

Techsense Banladesh Ltd

Rodless Cylinder Code : series-pu

Series PU rodless cylinders have an internal strip for longitudinal tightness made of polyurethane (PU) with a harmonic steel wire core. This solution gives excellent air tightness values. It is particularly suitable for high-speed and highly cyclical applications, even with long strokes. The external strip, which merely provides protection against of foreign bodies entry, is made of harmonic steel. The anodised aluminium cylinder liner has a T-slot on either side for housing the retracting sensors. Cylinder control solenoid valves can also be housed in these slots and secured by means of plates and screws (see page 1-46). There are plastic anti-wear guide shoes on either side of the carriage to increase the load capacity. They engage V-slots in the cylinder liner. All the cylinders incorporate adjustable pneumatic cushioning. One version has hydraulic decelerators + adjustable limit switches. These can also be added at a later stage by purchasing the relevant kit. The balanced drive version avoids having to transmit transverse torques and forces to the carriage whenever the load is supported by guides outside the cylinder.

COMPONENTS

- CYLINDER HEAD: anodized aluminium alloy
- BARREL: profiled anodized aluminium alloy
- PISTON GASKET: polyurethane
- V-SHAPED GUIDE SHOE: Hostaform®
- DUST SCRAPER: Hostaform®
- PISTON: Hostaform®
- CUSHIONING CONE: anodized aluminium alloy
- STATIC O-RINGS: NBR
- SLIDE: anodized aluminium alloy
- OUTER STRIP: stainless steel
- INTERNAL STRAP: polyurethane + steel strands
- DIRECTION CHANGE: Hostaform®
- BUFFER: polyurethane

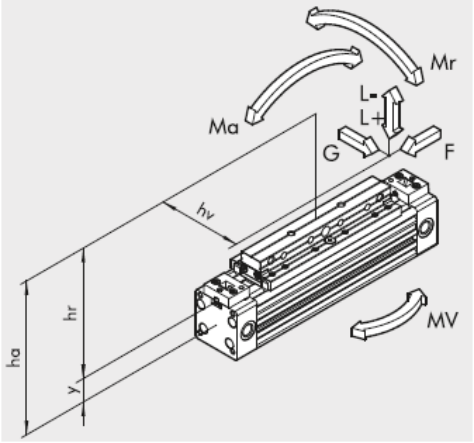

Wiring Diagram

TECHNICAL DATA

Operating pressure bar	: 1 to 8
Temperature range °C	: –10 to +80
Fluid	: 50 micro. m unlubricated filtered air Lubrication, if used, must be continuous
Bores mm	: 25, 32, 40, 50
Type of construction	: Doubl-acting rodless cylinder with direct transmission system
Strokes mm	: Ø 25 ÷ 40: from 100 to 5700 mm with 1mm interval
Notes	: For speeds lower than 0.2 m / s to prevent surging, use the version No stick-slip and non-lubricated air

For further information please visit : https://goo.gl/VdhYPn

We are the authorized distributor of Metal Work in Bangladesh.

LISTED IND. CONT. EQ. 81U2 for use in the secondary of a class 2 source of supply

IND. CONT. EQ 81U2 for use in the secondary of a class 2 source of supply Environmental - Type 1 Enclosure